FLAT NANO

The Desktop Plant Lighting

ONF®

ABOUT ONF

ONF, it is not only a new noun but a new concept of the lifestyle—Between ON and OFF, you may discover more beautiful moments and enjoy the balance of life.

ON，start an energetic day in the bright space, light up inspiration, filled with an endless energy of work.
OFF, release from a hard work day in the soft light, turns to relaxation, enjoy the leisure.

Between ON and OFF, day and night, fast and slow, compact and relaxed, ONF aims to make a balance of wonderful life.
By discovering every joyful moment in life, whenever reading an attractive book ,gathering with friends or focusing on the work, in these moment, you may choose the most suitable lighting source for you.

ONF's team has the lighting design base, development and professional manufacture background, we devote to require not only Eco friendly but also high-end design of lighting.
We hope to popularize the LED lighting to every space, creating the best quality of MIT lighting.

ColorFull LED

ONF exclusive ColorFull LED combination advantage of three wavelengths + full spectrum light color, the color closer to the real but more dazzling, which brighten up the aquatic plants vividly and clearly.

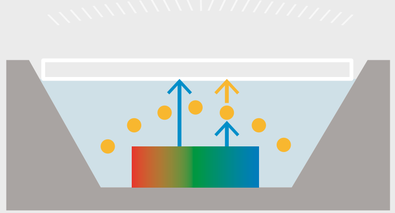

ONF ColorFull LED

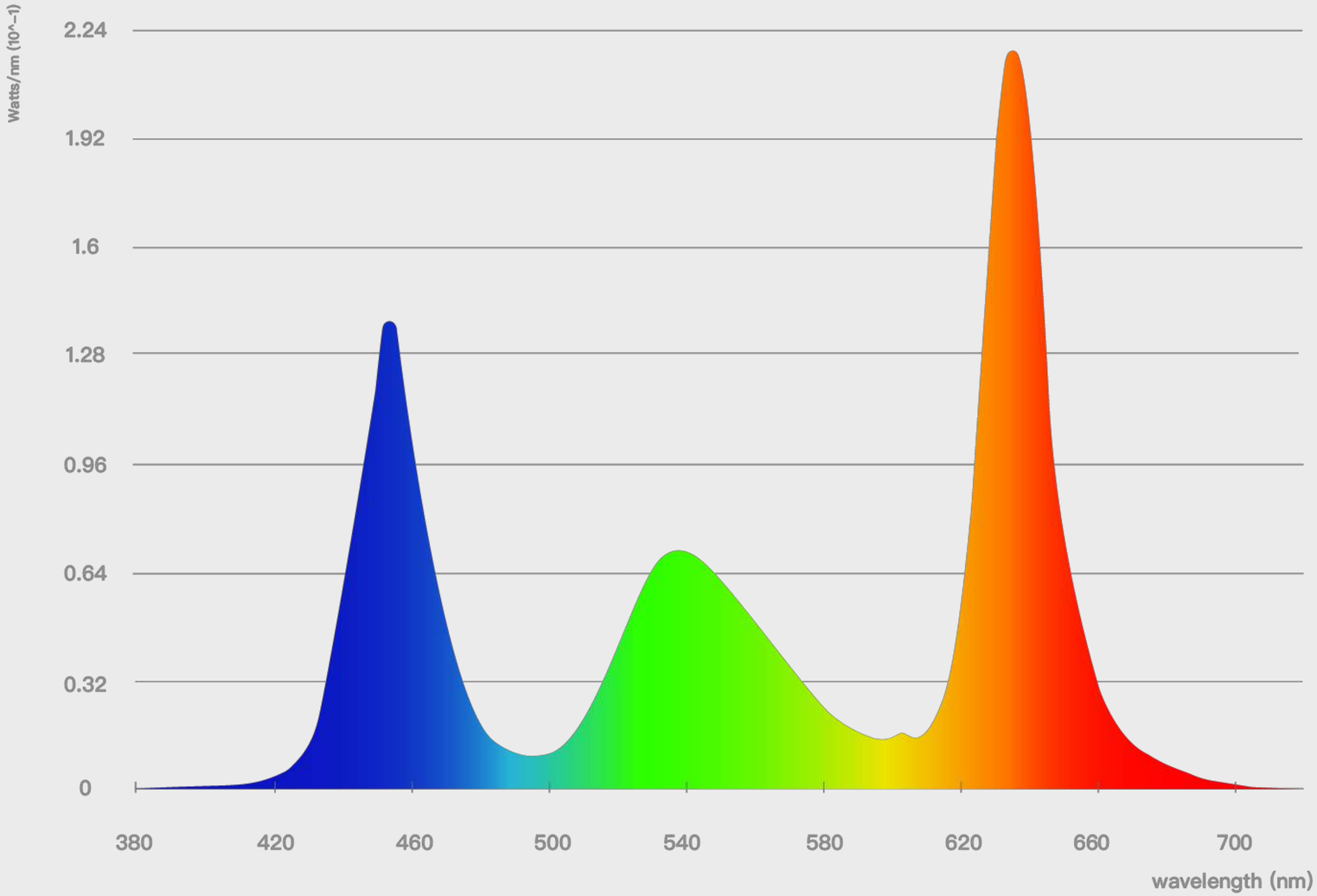

The aquatics now appears to be more vivid and larger than life.

With our fluorescent powder algorithm,
the ColorFull spectrum helps all aquatic creatures to grow better, healthier and faster.

Others

ONF ColorFull LED

Natural color development techniques

The wide-area color rendering technology of ColorFull LED, which not only provides the wavelengths required by plants but also complements the spectrum of other bands, making the color more stereoscopic and vivid.

ONF ColorFull LED

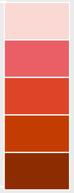

Normal LED

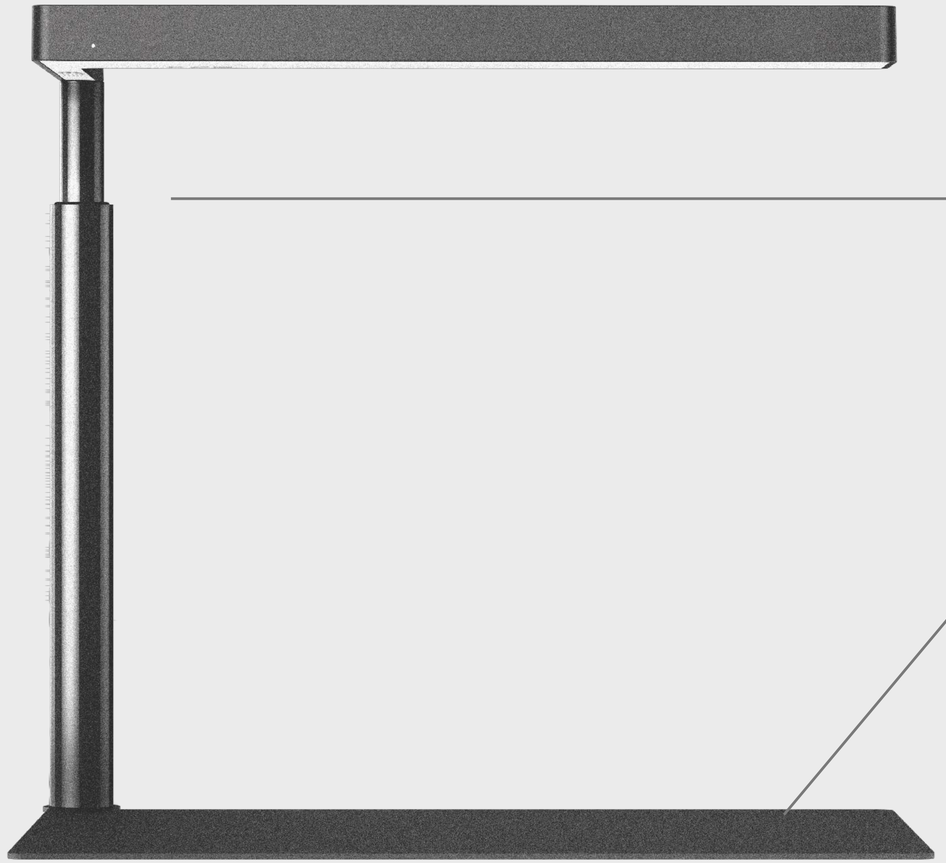

• According to the growth of the plant, the height of the light can be adjusted by rubber stopper.
• The lamp body can be rotated 360 degrees for easy maintenance.

• Black matte paint base could be avoid damage caused by the friction of the basin on the base.

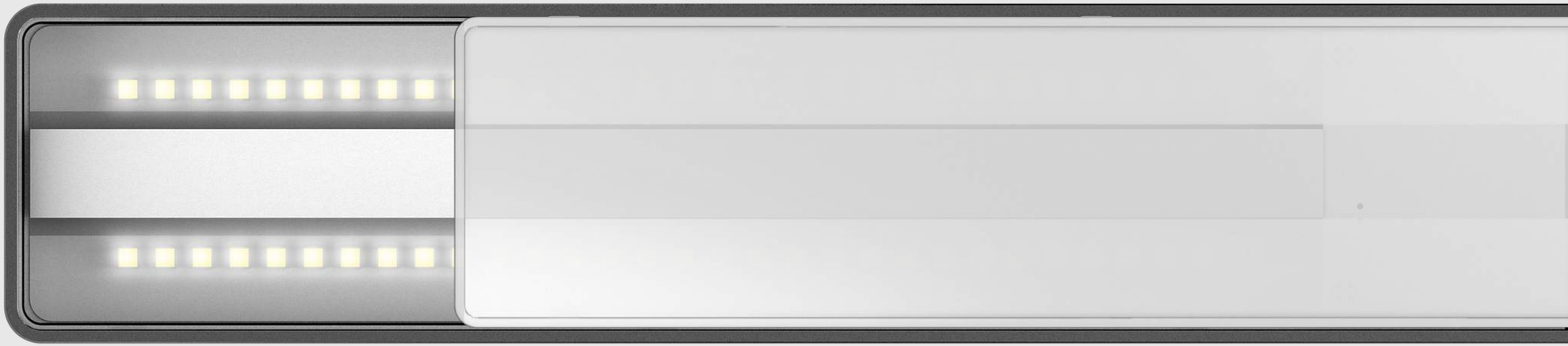

1300lm / 15W

Highest luminous efficiency

Dimmable

Increments of 100%-75%-50%-25%-100%

Brightness Memorize

It will memorize its previous brightness before turning off

Gradual Ramp UP & Down

In order to protect human eyes and not shock tank inhabitants

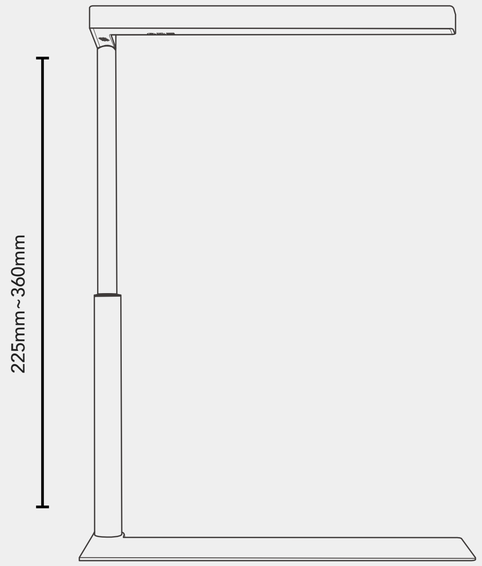
225mm~360mm

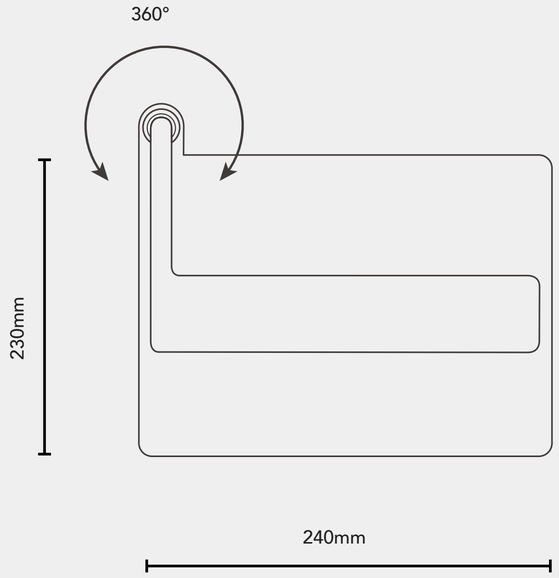
360°
230mm
240mm

Product Size

240x 230 x 225- 360 mm
(L) x (W) x (H)

Product weight

1220 g

Color temperature

7000 K

Input voltage

100 - 240 VAC ,
50 / 60 Hz

Surface color

Black

Brightness

1300 lm

LED lifetime

50,000 hr

Power consumption

15W

Beam angle

110°

Material

Aluminum / plastic / rubber / zinc-plating

Waterproof grade

IP 54

CN

nda
nature design aquascaping

nda
nature design aquascaping

ONF

Website	https://www.onfaqua.com/
Facebook	ONF
Instagram	onf_lighting
Email	support@onf.com.tw